for single phase alternating current, 4 pole

FN035-4E

Characteristic curve

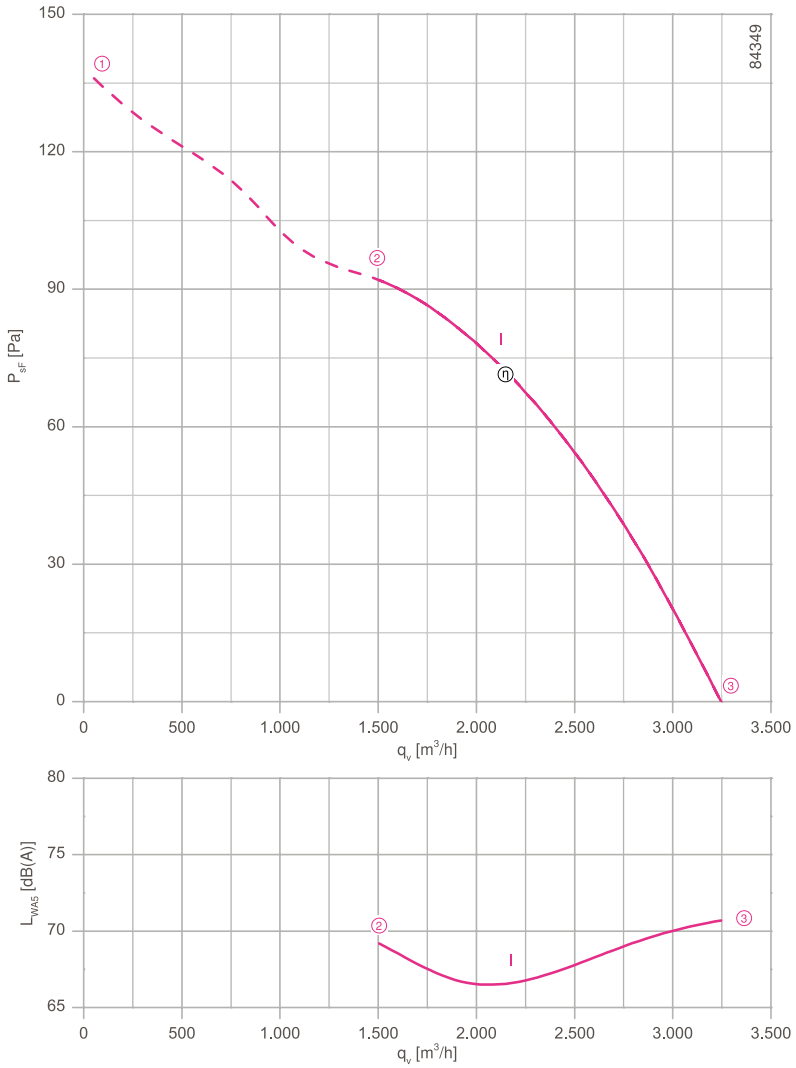

Measured in full bell mouth without guard grille in installation type A according to ISO 5801.

Description

Motor technology: AC
Rated voltage U_N: **1~ 230 V***
Rated frequency f_N: **50 Hz***
Motor input power P_1: **0.18 kW***
Rated current I_N: **0.77 A***
Rated speed n_N: **1230 min^{-1}***
Starting current I_A: 1.20 A
Current increase ΔI: 0 %
Service capacitor C_{400V}: 5.0 µF
Thermal class: **THCL155***
Min. permitted conveyor temperature $t_{R(min)}$: -40 °C
Max. permitted conveyor temperature $t_{R(max)}$: 60 °C
Electrical connection: Supply cable variable 45 cm
Number of blades: 7
Motor protection: Thermal contact
Blades: High Performance Composite Material, uncoated, black
Rotor: Aluminium, 1 coat paint, Ultramarine blue
Conformity: ErP 2013, CE
ErP Data
Efficiency η_{statA}: 27.5 %
Efficiency: N_{actual} = 38.8 / N_{target} = 36**
* Rated data
**ErP 2013

Connection diagram 1360-177X Page 609
System components Page 524

Dimensions [mm]

Airflow direction A

Design W - axial bolted, mounting for short bell mouth E

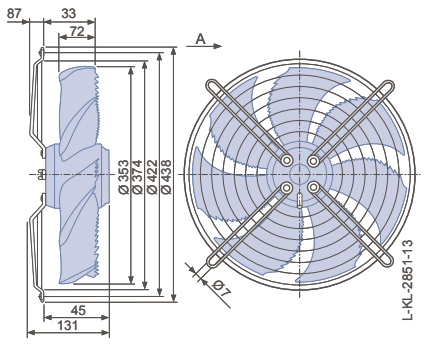

Design D - axial bolted, suspension for full bell mouth Q and L

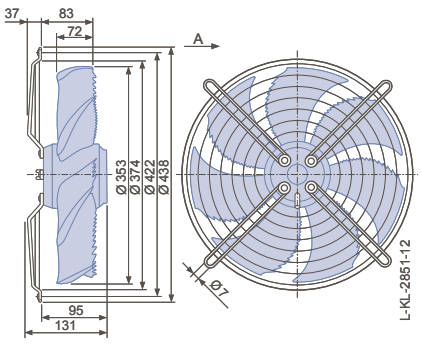

Design L - round, full bell mouth

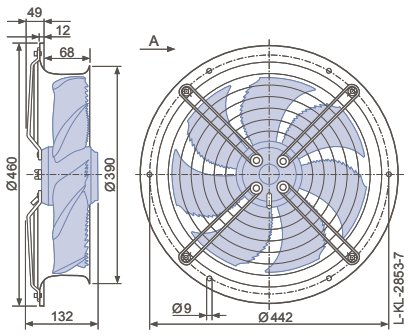

	curve	U [V]		I [A]	power P_1 [W]	n [min⁻¹]	power level L_{WA5} [dB]
FN035-4E_.WD._7	I	230	①	0.86	200	1140	
		230*	②	**0.78***	**180***	**1230***	69
		230	③	0.58	130	1370	71

*rated data

Fan ordering information

Airflow direction A → | ← Airflow direction V

Design	W	D	L	K	H	I
			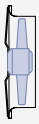		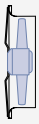	
Type	**FN035-4EW.WD.A7**	**FN035-4ED.WD.A7**	**FN035-4EL.WD.A7**	**FN035-4EK.WD.V7**	**FN035-4EH.WD.V7**	**FN035-4EI.WD.V7**
Article no.	**141417**	**141415**	**141416**	**141420**	**141419**	**141418**
Weight [kg]	4.90	4.50	6.50	4.90	6.50	4.50

Control technology

Frequency inverter Fcontrol 1~	Motor protection units 1~	Transformer-based controllers 1~	Electronic voltage controllers 1~
Page 552	Page 596	Page 587	Page 562

Airflow direction V

Design K - axial bolted, mounted for short bell mouth E

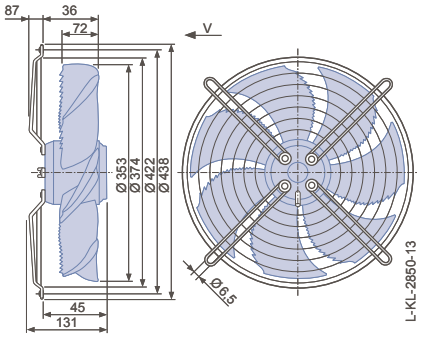

Design H - pipe sockets with a flange

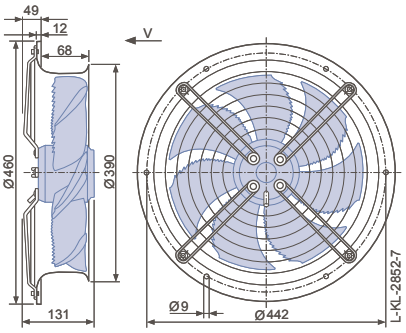
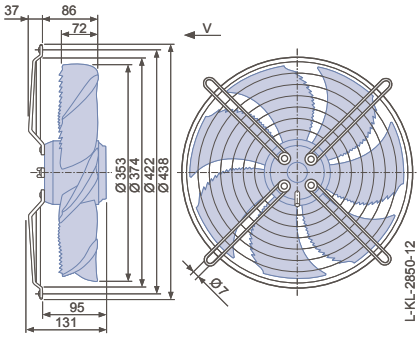
Design I - axial bolted, mounting for bell mouth flange for pipe socket H or full bell mouth Q or L