LWBE-450 Serise

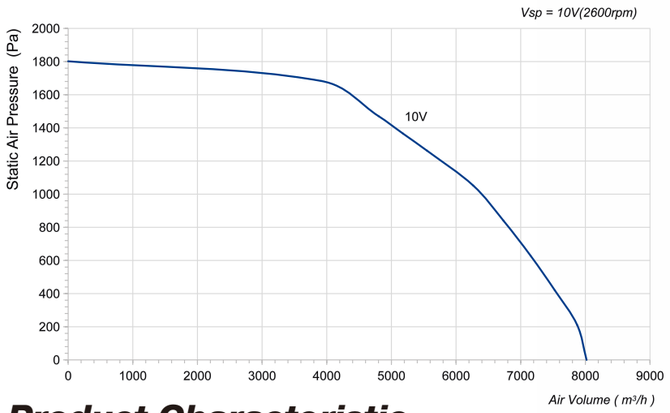

Product Characteristic

Impeller Material:	Aluminum Alloy	Supply Voltage:	400V,50/60Hz
Direction of Rotation:	Clockwise,seen on rotor	Mode of Operation:	S1
Protection Class:	IP54	Insulation Class:	F
Mounting Position:	Horizontal or Vertical	Operation Temperature:	-25℃～+60℃
Bearing:	Maintenance-free ball bearings	Technical Features:	Control input 0-10VDC/PWM
Protection:	Tach output,Locked-Rotor protection Reverse Polarity,Over-voltage protection,Soft Start		

CE RoHS ETL BSCI ISO EAC UL LVD

Technical Specifications

Model	Voltage (V)	Input Power (W)	Current (A)	Air Volume (m³/h)	Static Pressure (Pa)	Speed (RPM)	Noise [dB(A)]
LWBE3G450-188NT-16	400	2060	4.2	8019	1802	2600	/

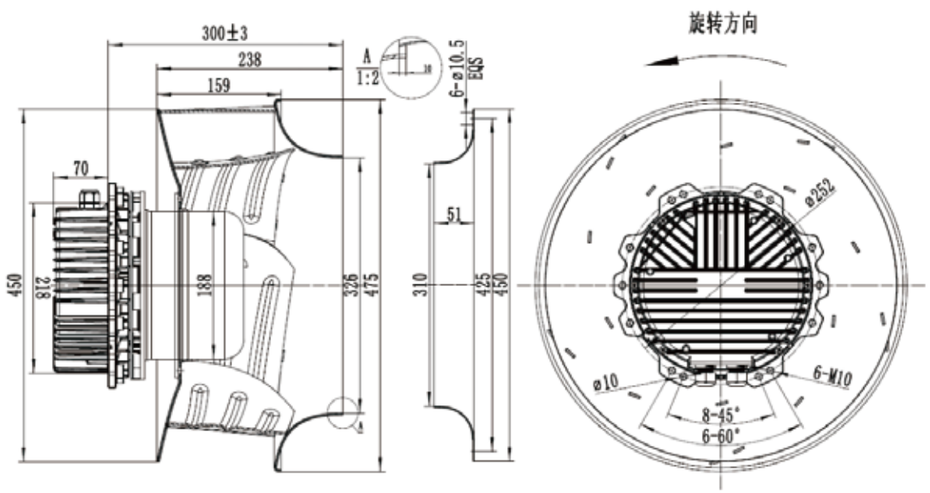

ВЕНТИЛЯТОРЫ.RU
МАГАЗИН ПРОМЫШЛЕННЫХ ВЕНТИЛЯТОРОВ
ventilatorry.ru

LWBE-450 Serise

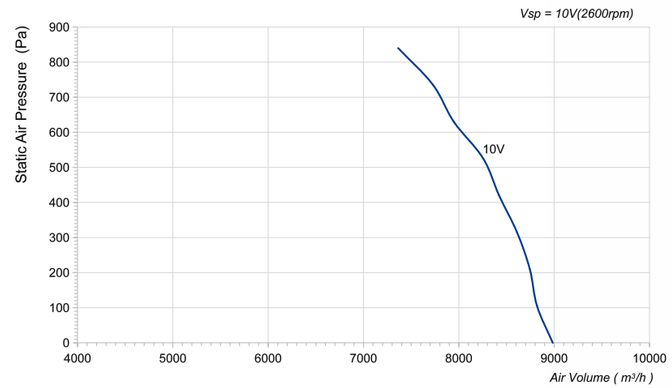

Product Characteristic

Impeller Material:	Aluminum Alloy	Supply Voltage:	400V,50/60Hz
Direction of Rotation:	Clockwise,seen on rotor	Mode of Operation:	S1
Protection Class:	IP54	Insulation Class:	F
Mounting Position:	Horizontal or Vertical	Operation Temperature:	-25℃～+60℃
Bearing:	Maintenance-free ball bearings	Technical Features:	Control input 0-10VDC/PWM
Protection:	Tach output,Locked-Rotor protection Reverse Polarity,Over-voltage protection,Soft Start		

CE RoHS ETL BSCI ISO EAC UL LVD

Technical Specifications

Model	Voltage (V)	Input Power (W)	Current (A)	Air Volume (m³/h)	Static Pressure (Pa)	Speed (RPM)	Noise [dB(A)]
LWBE3G450-188NT-14	400	2400	5.2	8985	840	2600	/

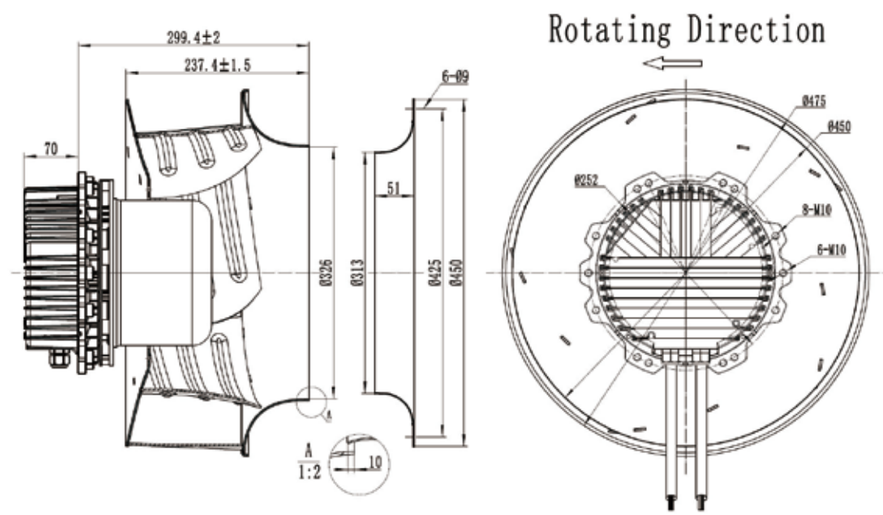

zakaz@ventilatorry.ru +7 (495) 133-95-09