LWBE-310 Series

Product Characteristic

- Impeller Material: Aluminum Alloy
- Supply Voltage: 1～,200-277V,50/60Hz
- Mode Of Operation: S1
- Protection Class: IP54
- Insulation Class: F
- Operation Temperature: -25℃～+60℃
- Techniacal Feature: Control input 0-10VDC/PWM,Tech output,Locked-Rotor protection,Reverse Polarity Over-voltage protection, Soft Start Protection.

Technical Specifications

Model	Voltage	Input Power	Current	Air Volume	Static Pressure	Speed	Noise
	V	W	A	m³/h	Pa	RPM	dB(A)
LWBE3G310-102PS-02	230	360	1.57	2732	601	2150	69.9

Flow Rate Curve

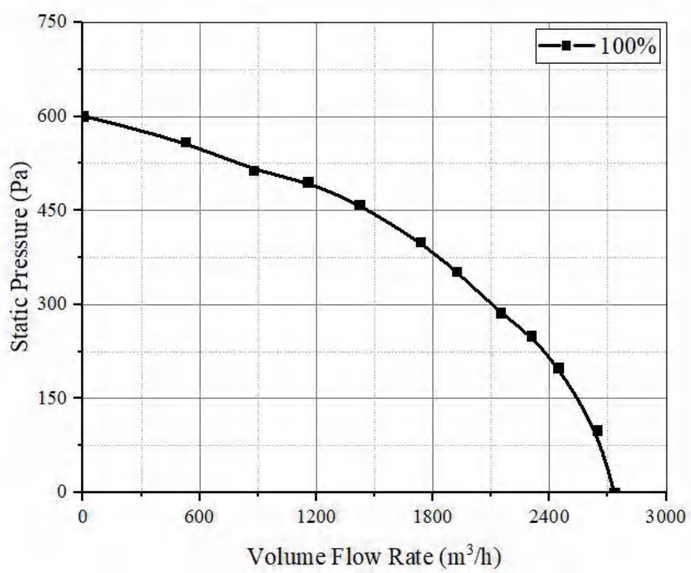

ВЕНТИЛЯТОРЫ.RU
МАГАЗИН ПРОМЫШЛЕННЫХ ВЕНТИЛЯТОРОВ
ventilatorry.ru

Product Drawing

LWBE3G310-102NS-016 (without bracket)

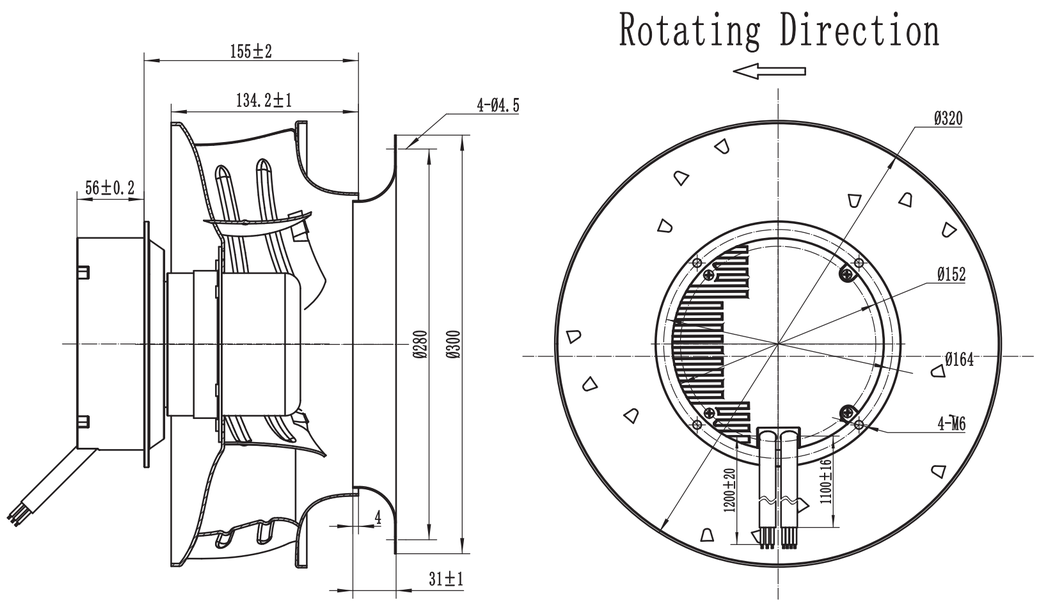

LWBE3G310-102PS-02 (with bracket)

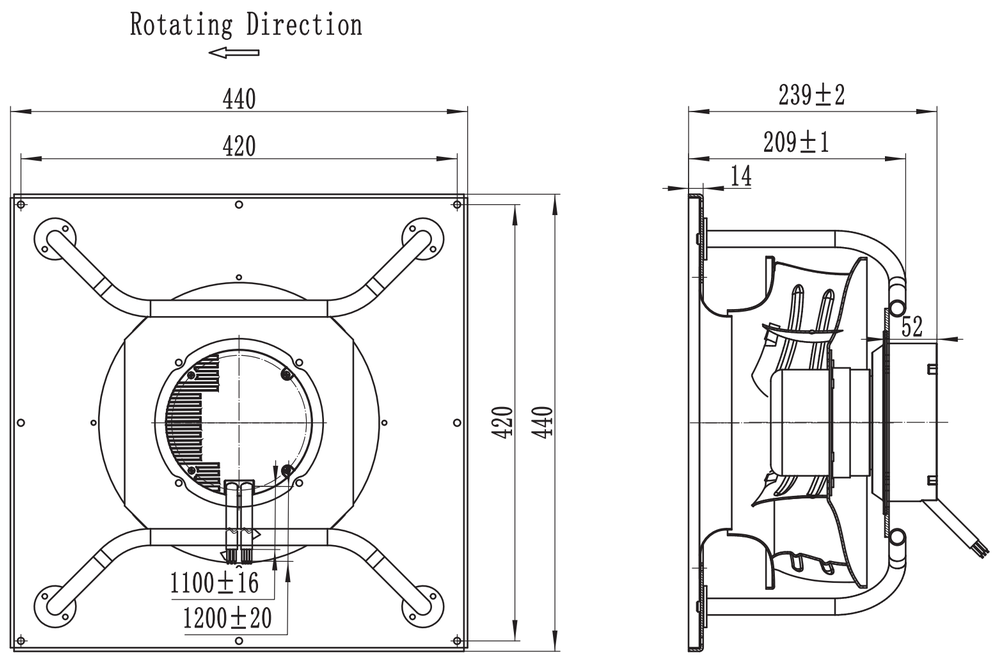

zakaz@ventilatorry.ru +7 (495) 133-95-09