ВЕНТИЛЯТОРЫ.RU
МАГАЗИН ПРОМЫШЛЕННЫХ ВЕНТИЛЯТОРОВ
ventilatorry.ru

LWBE-220 Series

Product Characteristic

- Impeller Material: PA6+GF
- Supply Voltage: 1～,200-277V,50/60Hz
- Mode Of Operation: S1
- Protection Class: IP55
- Insulation Class: F
- Operation Temperature: -25℃～+60℃
- Techniacal Feature: Control input 0-10VDC/PWM,Tech output,Locked-Rotor protection,Reverse Polarity Over-voltage protection, Soft Start Protection.

Technical Specifications

Model	Voltage	Input Power	Current	Air Volume	Static Pressure	Speed	Noise
	V	W	A	m³/h	Pa	RPM	dB(A)
LWBE3G220-72PS-02	230	115	0.9	980	580	2800	69

Flow Rate Curve

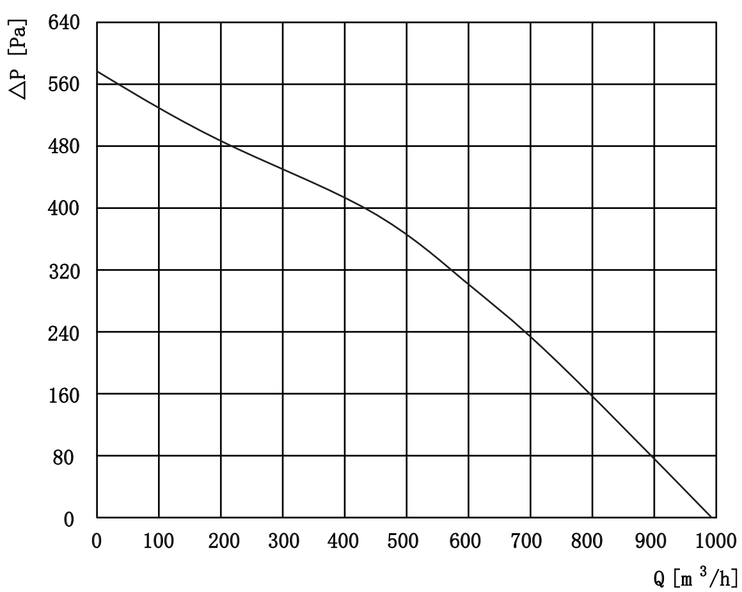

Product Drawing

LWBE3G220-072NS-009 (without bracket)

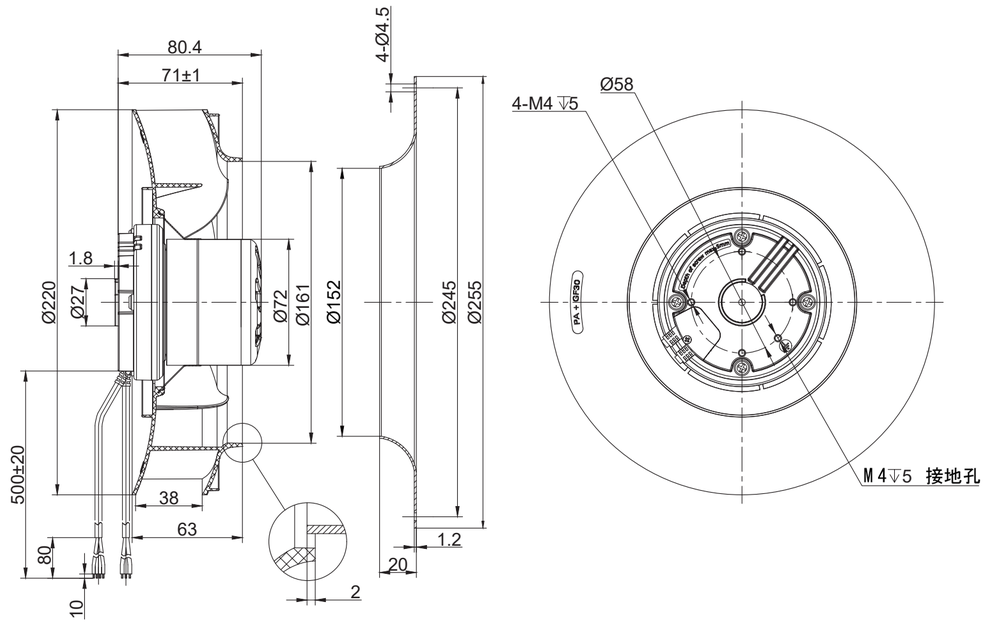

LWBE3G220-72PS-02 (with bracket)

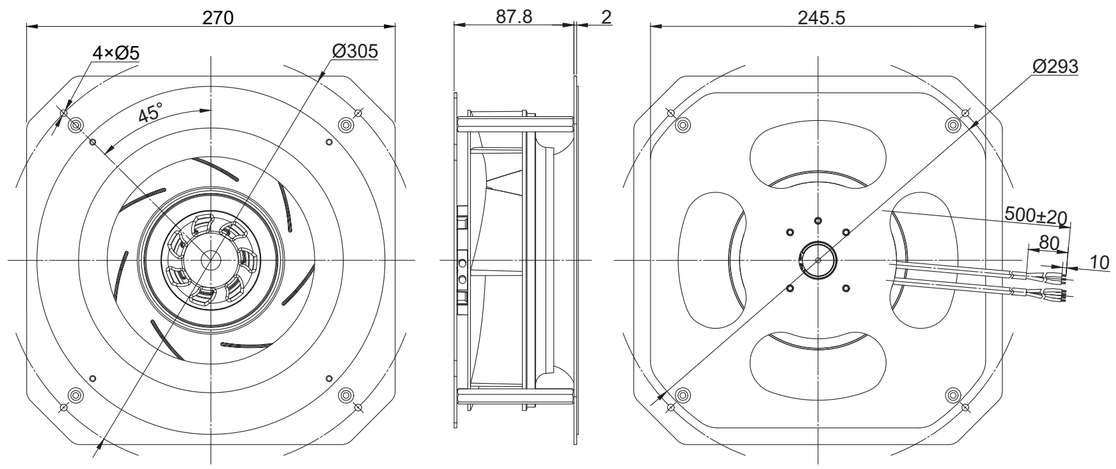

zakaz@ventilatorry.ru +7 (495) 133-95-09