ВЕНТИЛЯТОРЫ.RU
МАГАЗИН ПРОМЫШЛЕННЫХ ВЕНТИЛЯТОРОВ
ventilatorry.ru

LWBA-500 Series

Product Characteristic

- Impeller material : Aluminum Alloy
- Direction of rotation: Clockwise,seen on rotor
- Mode of operation: S1
- Type of protection: IP 54
- Insulation class: F
- Bearing: Ball bearings
- Operation Temperature: -40~+65 ℃

Technical Specifications

Model	Voltage	Frequency	Power	Current	Speed	Air Flow	Air Pressure	Noise	Capacitor	Curve
	V	Hz	W	A	RPM	m³/h	Pa	dB(A)	uF	
LWBA6D500-138NT-03	380	50	450	1.25	950	5200	350	63	/	①
LWBA6D500-138NT-04	380	60	550	1.40	1050	5700	450	65	/	②

Flow Rate Curve

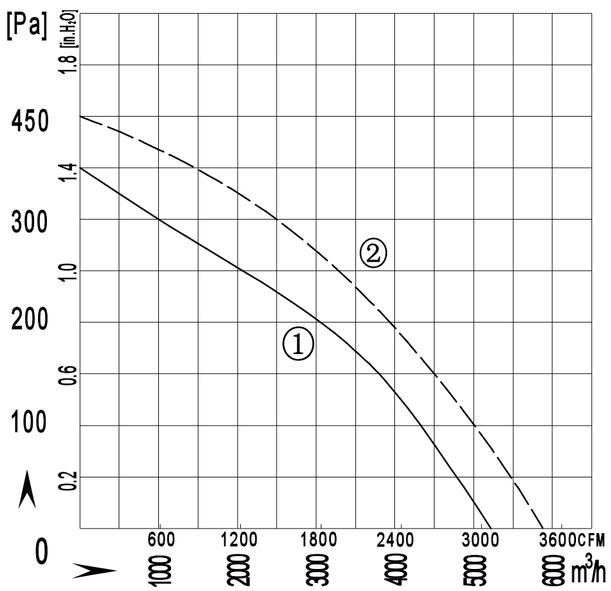

Product Drawing

AC Backward curved Centrifugal Fan Φ500

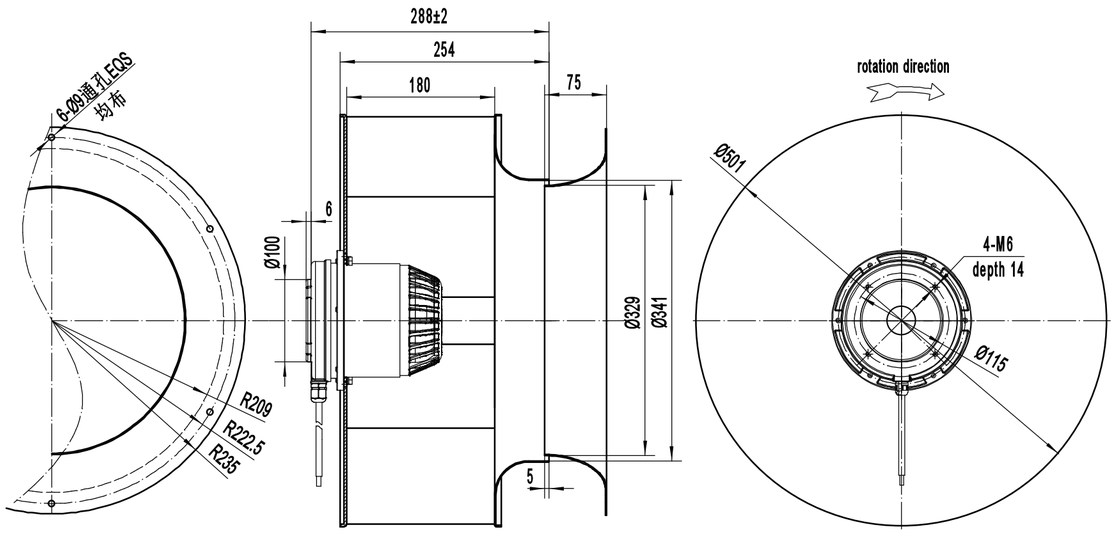

zakaz@ventilatorry.ru +7 (495) 133-95-09