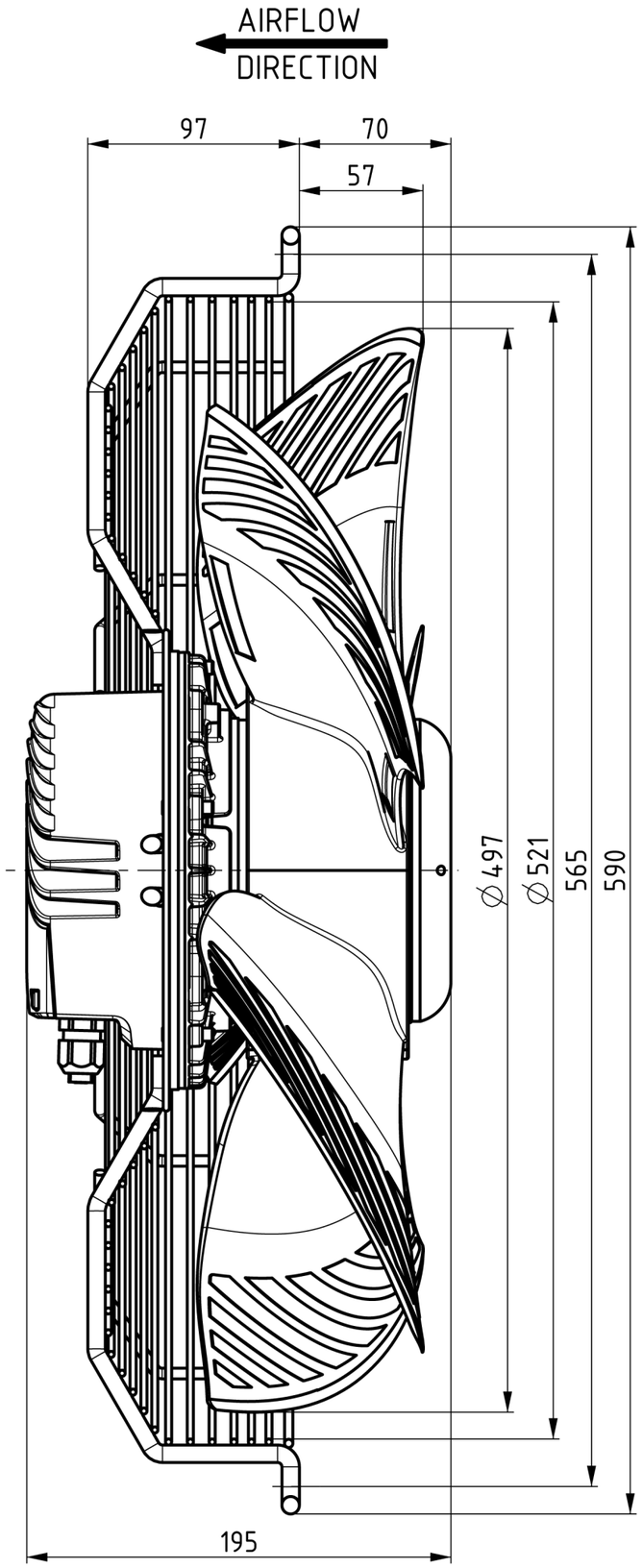
AIRFLOW
DIRECTION
97
70
57
∅497
∅521
565
590
195

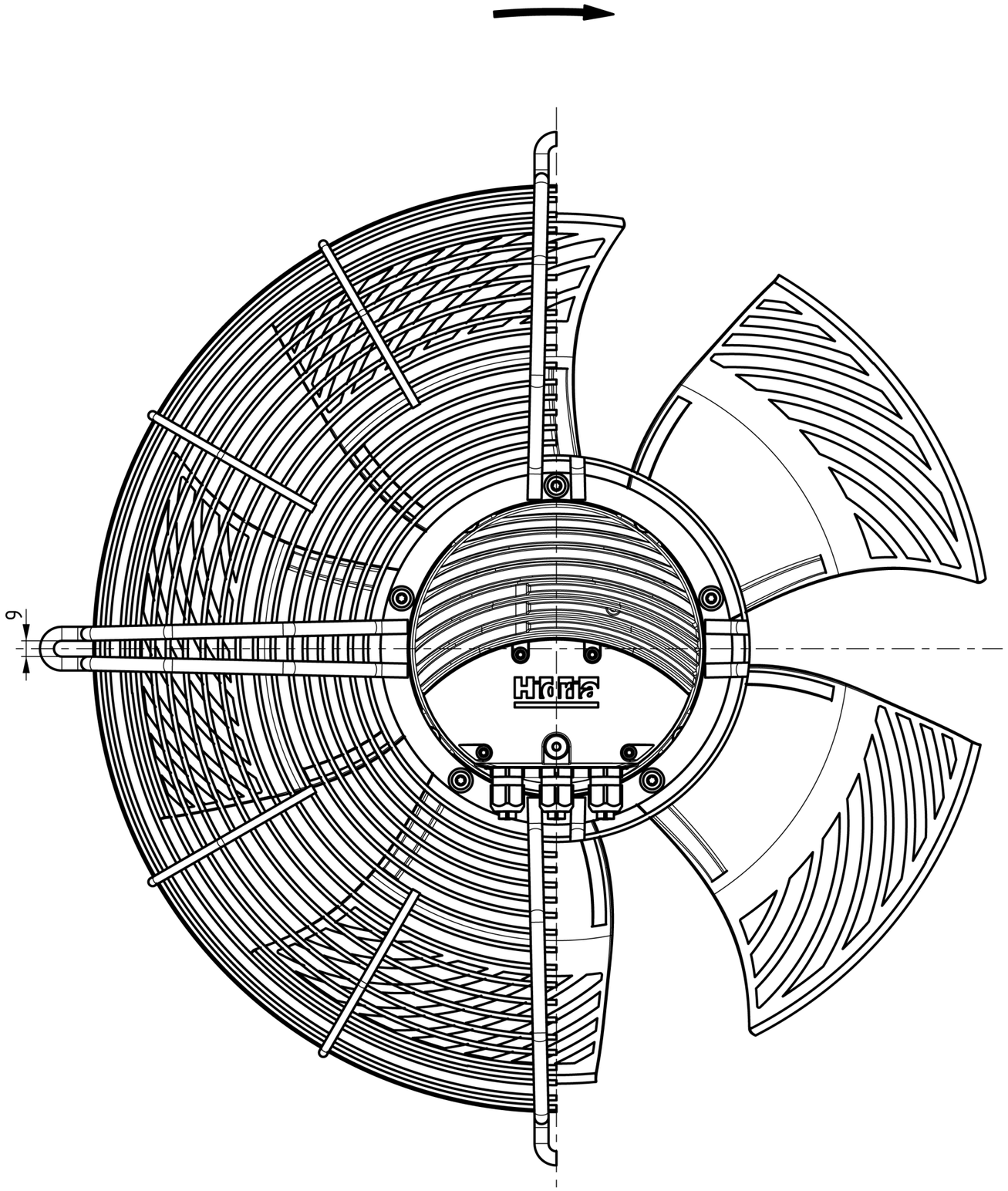
9