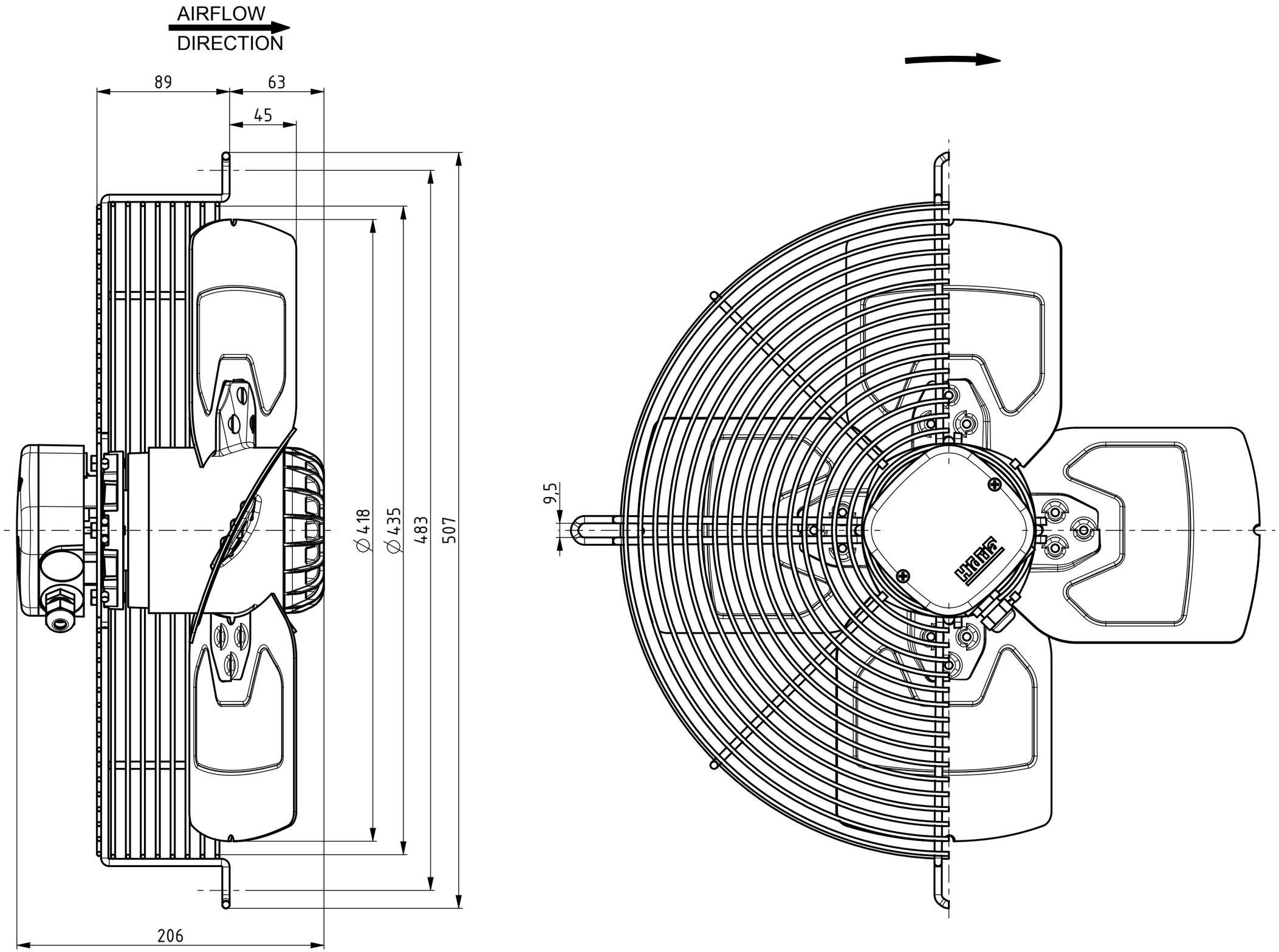
AIRFLOW
DIRECTION
89
63
45
⌀418
⌀435
483
507
206
9,5