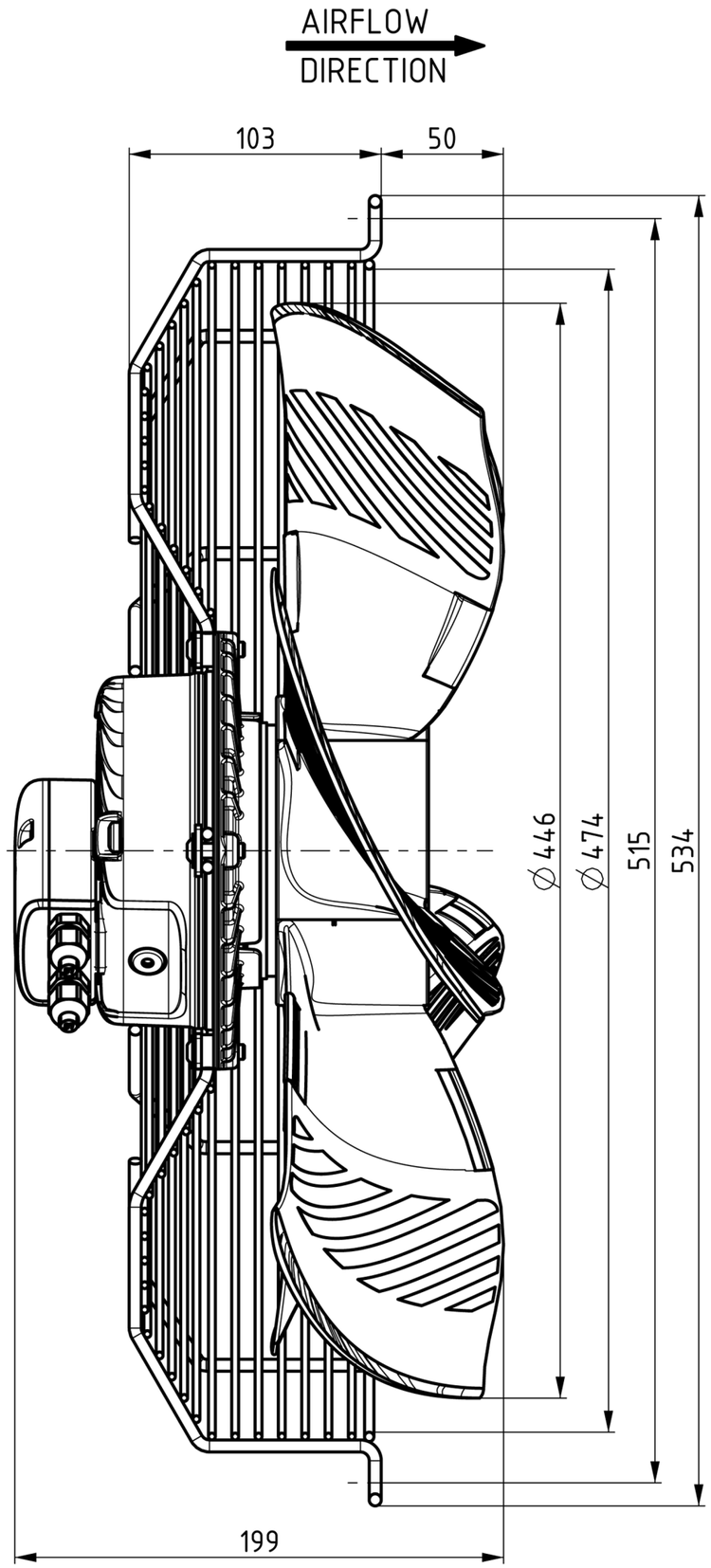
AIRFLOW
DIRECTION
103
50
∅446
∅474
515
534
199

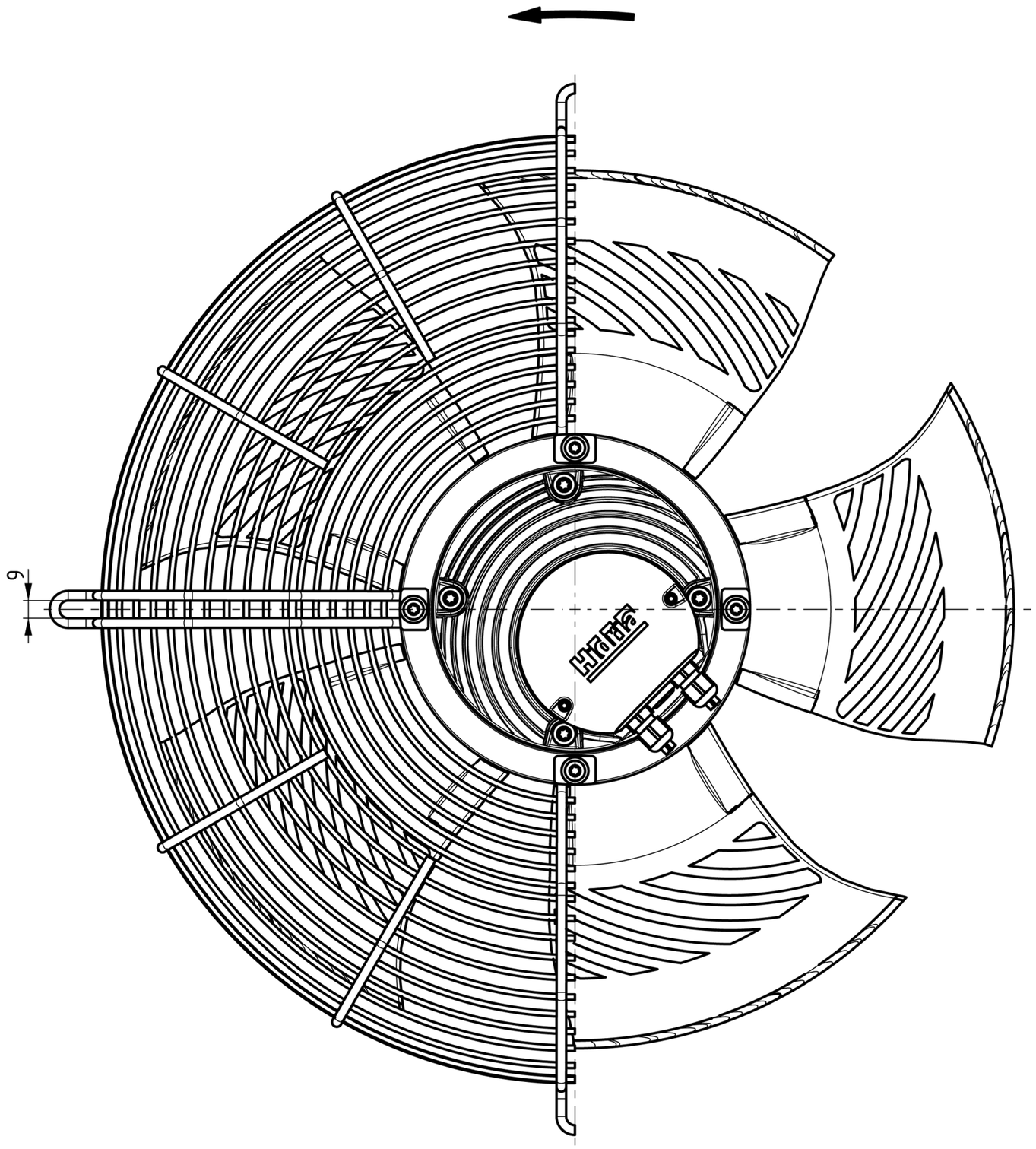
9