# Radial blowers with EC external-rotor motor

G3G250 – 230 VAC

**material**
- housing: aluminium
- impeller: sheet aluminium
- cover: plastic PP30TV

**interface**
- see interface 81, interface no. 6

**premix**
- If gas needs to be premixed in the blower, then a special blower will have to be used. For further details, please contact us.

**approvals**
- 115 VAC: UL

**ebm-papst · Mulfingen**

| Nominal data | characteristic curve | voltage | frequency | air volume | power input | speed | current draw | perm. temp. of medium | perm. amb. motor temp. | mass |
|---|---|---|---|---|---|---|---|---|---|---|
| type | | VDC | Hz | m³/h | W | min⁻¹ | A | °C | °C | kg |
| G3G 250 -GN39 -01 | 2 | 115 | 50/60 | 1650 | 1110 | 4850 | 12,0 | 60 | 60 | 12,8 |
| G3G 250 -GN44 -01 | 1 | 230 | 50/60 | 1500 | 860 | 4550 | 3,8 | 60 | 60 | 12,8 |
| G3G 250 -GN17 -01 | 2 | 230 | 50/60 | 1650 | 1030 | 4850 | 4,5 | 60 | 60 | 12,8 |

subject to alterations

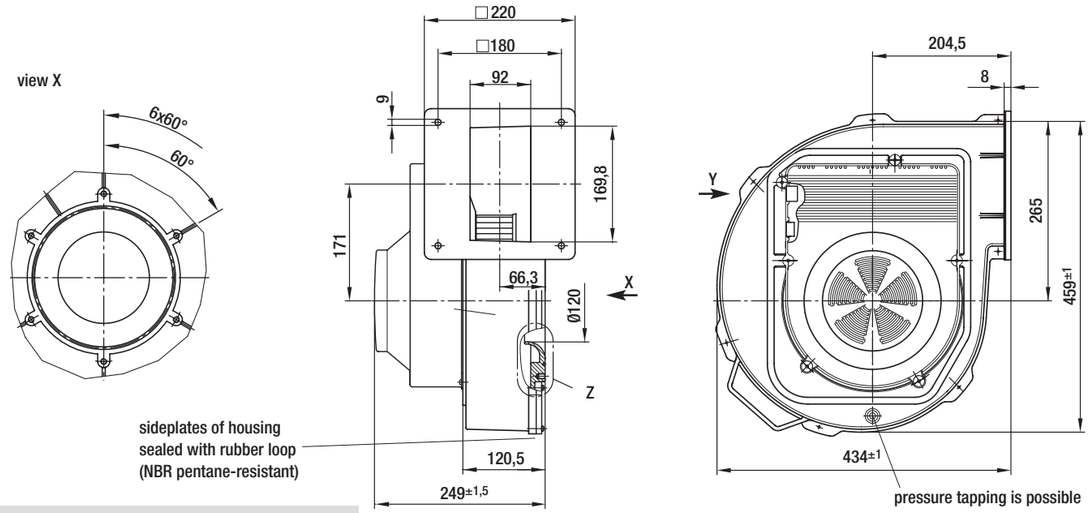


## Characteristic curves

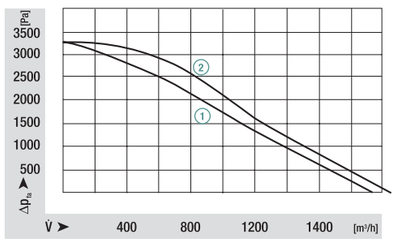


detail Z

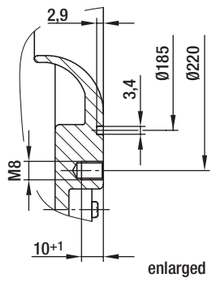


view Y

mains connection
3-pole header
mating connector
(not part of delivery):
tyco no. 350 766-1
female terminal:
tyco no. 926 884-1

control
5-pole header
mating connector
(not part of delivery):
Molex no. 39-01-4050
female terminal:

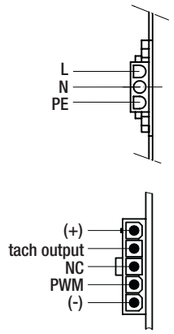


ВЕНТИЛЯТОРЫ.RU
МАГАЗИН ПРОМЫШЛЕННЫХ ВЕНТИЛЯТОРОВ

# Interfaces

for blowers with EC internal-rotor motor BG3612/3633

## standard interface 1

24 VDC control Gasmodul compatible

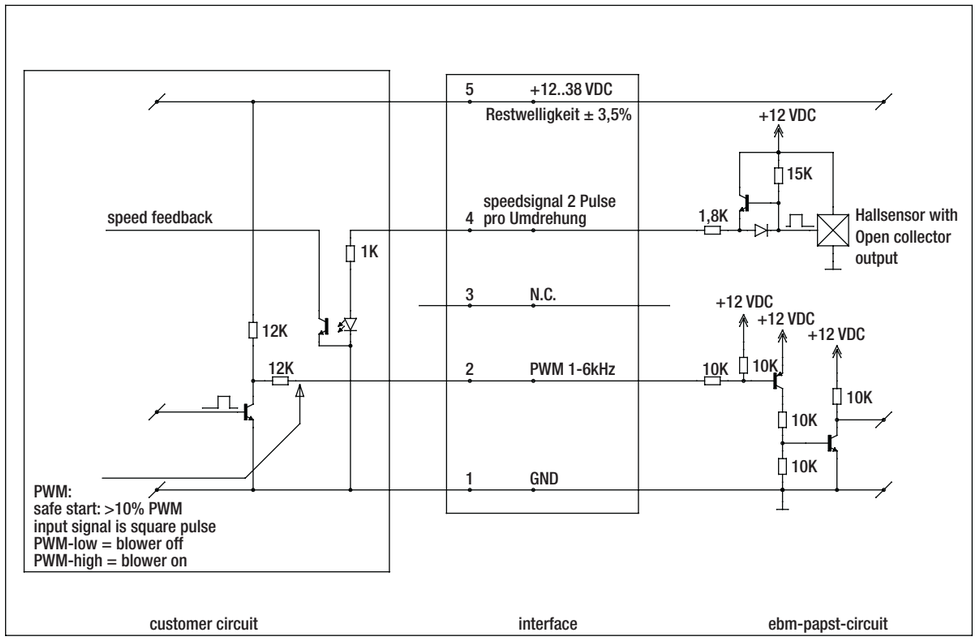


## standard interface 2

230 VAC, 50/60 Hz 120 VAC, 50/60 Hz control Gasmodul compatible (alternative for L&S)

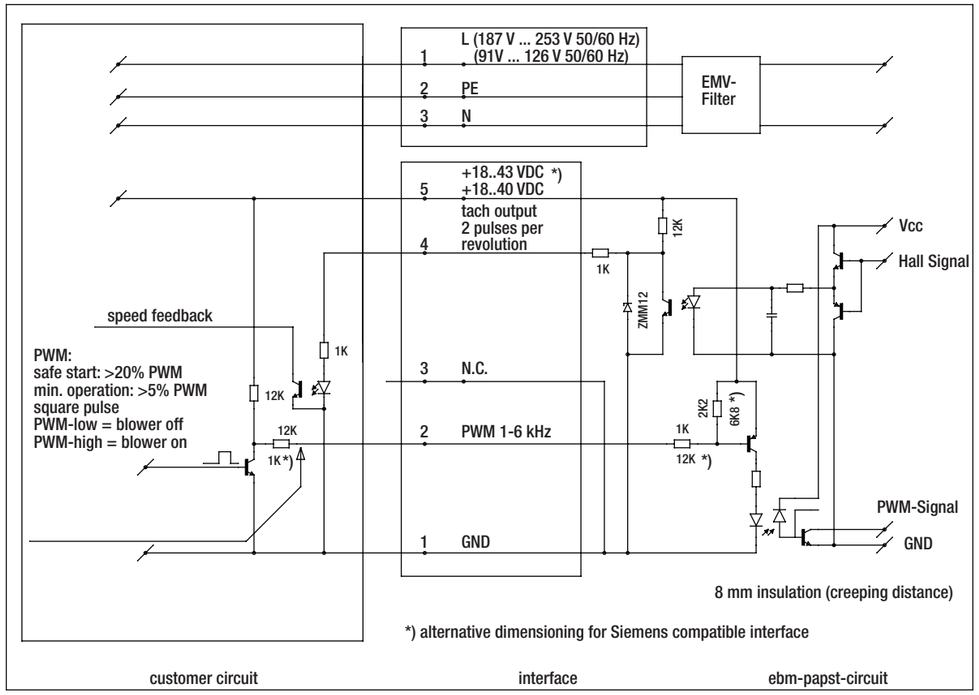


E-mail: zakaz@ventilatorry.ru