ВЕНТИЛЯТОРЫ.RU
МАГАЗИН ПРОМЫШЛЕННЫХ ВЕНТИЛЯТОРОВ
zakaz@ventilatorry.ru

Max. 135 m³/h

ACmaxx in-line duct fan

Ø 98.5 x 130 mm

- **Material:** Housing: GRP[1] (PBT)
  Impeller: GRP[1] (PA)
- **Direction of air flow:** Intake over struts
- **Direction of rotation:** Clockwise, looking towards rotor
- **Connection:** Via 3-pin Europa terminal strip max. 1.5 mm²
- **Highlights:** Universally usable for all main voltages between 85 and 265 VAC, 50-60 Hz, Boost function
  Vibration-isolated motor
  Optional: new impeller for high pressure. Two speeds over jumper adjustable
- **Weight:** 400 g

- **Possible special versions:**
  (See chapter DC fans - specials)
  - Speed signal
  - PWM control input
  - Analog control input 0…10 VDC
  - Moisture protection
  - Degree of protection: IP 44 (IP45 possible depending on installation position)

1) Fiberglass-reinforced plastic

Series AC 100 **Nominal data**		Air flow	Air flow	**Nominal voltage**	**Frequency**	Voltage range	Sound pressure level	Sound power level	Sintec sleeve bearings □ / Ball bearings ■	Power consumption	Nominal speed	Temperature range	Service life L_{10} (40 °C) ebm-papst standard	Service life L_{10} (T_{max}) ebm-papst standard	Life expectancy L_{10PC} (40 °C) see page 17	Curve
Type high air flow		**m³/h**	**cfm**	**VAC**	**Hz**	**VAC**	**dB(A)**	**Bel(A)**	**□ / ■**	**Watts**	**rpm⁻¹**	**°C**	**Hours**	**Hours**		
Nominal boost	AC 100 MR	55 90	32 53	**115/230**	**50-60**	85...265	33 40	4.5 5.0	■	1.8 3.8	2 050 3 150	-10...+55	70 000 / 50 000	117 500	① ③
Nominal Boost	AC 100 NR	80 105	47 62	**115/230**	**50-60**	85...265	35 42	4.7 5.3	■	2.5 4.5	2 750 3 500	-10...+55	70 000 / 50 000	117 500	② ④
Max.	AC 100 HR*	135	79	**115/230**	**50-60**	85...265	tbd	tbd	■	7.0	4 500	-10...+55	tbd	tbd	⑤
Type high pressure		**m³/h**	**cfm**	**VAC**	**Hz**	**VAC**	**dB(A)**	**Bel(A)**	**□ / ■**	**Watts**	**rpm⁻¹**	**°C**	**Hours**	**Hours**		
Nominal Boost	AC 100 MR*	40 62	23 36	**115/230**	**50-60**	85...265	31 38	4.2 4.7	■	tbd tbd	2 050* 3 150*	-10...+55	70 000 / 50 000	117 500	⑥ ⑧
Nominal Boost	AC 100 NR-017	53 66	31 39	**115/230**	**50-60**	85...265	33 40	4.4 5.0	■	2.8 3.5	2 680 3 300	-10...+55	70 000 / 50 000	117 500	⑦ ⑧

Subject to change

* on request

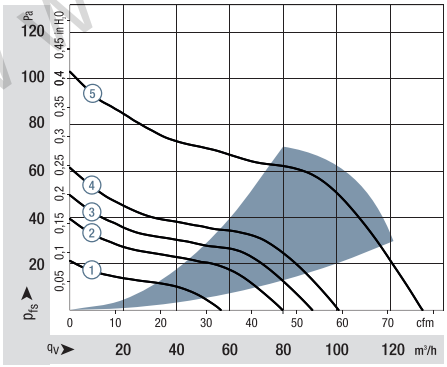

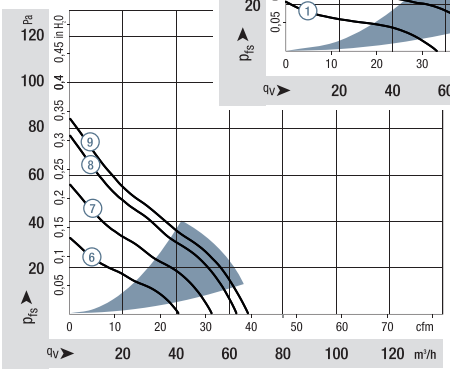

Impeller	Type	Boost off, Jumper low	Boost off, Jumper high	Boost on
High air flow	AC 100 MR	1 250	2 050	3 150
High air flow	AC 100 NR	2 200*	2 750	3 500
High pressure	AC 100 MR*	1 250*	2 050*	3 150*
High pressure	AC 100 NR-017	2 180	2 680	3 300

Air performance measured according to: ISO 5801.
Installation category A, without contact protection.
Noise: Total sound power level L_WA ISO 103002 measured on a hemisphere with a radius of 2 m.
Sound pressure level L_pA measured at 1 m distance from fan axis.
The values given are applicable only under the specified measuring conditions and may differ depending on the installation conditions.
In the event of deviation from the standard configuration, the parameters must be checked after installation!
For detailed information see http://www.ebmpapst.com/general conditions

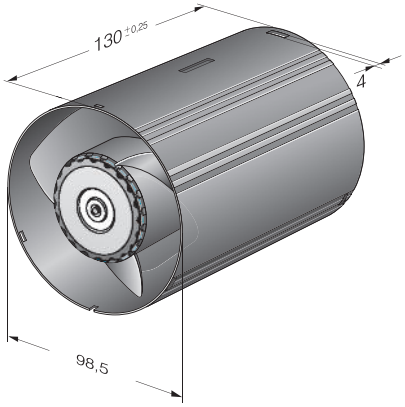

www.ventilatorry.ru

ВЕНТИЛЯТОРЫ.RU
МАГАЗИН ПРОМЫШЛЕННЫХ ВЕНТИЛЯТОРОВ
zakaz@ventilatorry.ru

Highest energy efficiency: 0.03 - 0.045 W/m³/h free air (specific fan power).
Boost speed: 2 speed settings possible via boost function.
Vibration isolation: Reduced transmission of vibrations from motor to housing.
Intelligence: Can be expanded to include set value requirement and signal outputs as an option.

Examples of connections

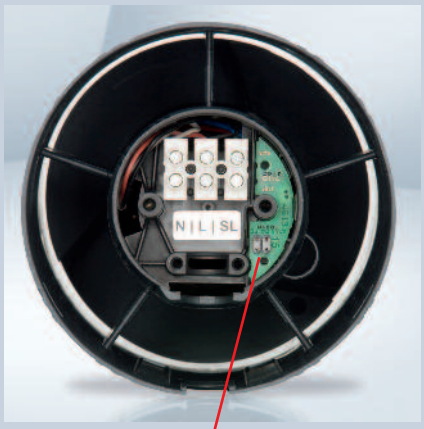

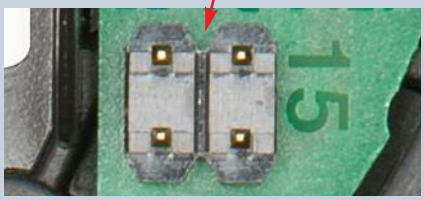

Jumper Low Jumper High

Example 1:
Nom speed endurance
Boost via light switch

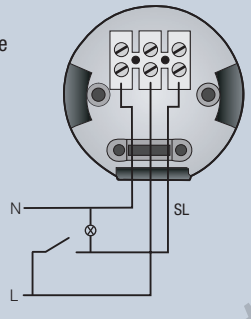

Example 2:
Nom speed via
light switch
Separate boost switch

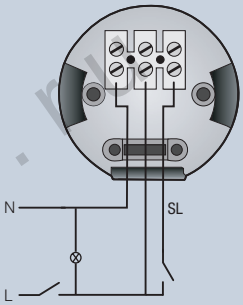

Example 3:
Simple connection
Nom speed without
switching

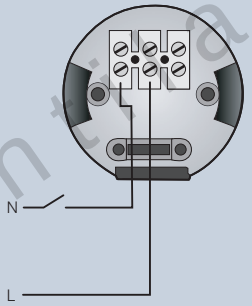

Example 4:
Simple connection
Boost without switching

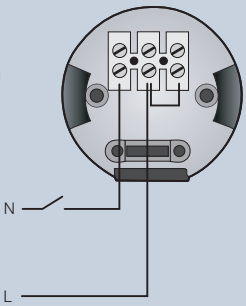

www.ventilatorry.ru
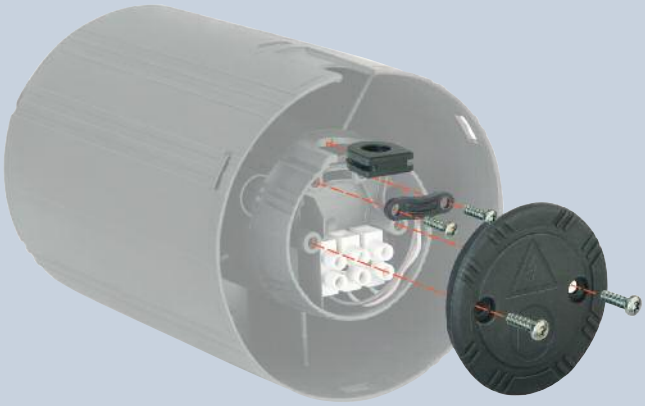
Scope of delivery