ВЕНТИЛЯТОРЫ.RU
МАГАЗИН ПРОМЫШЛЕННЫХ ВЕНТИЛЯТОРОВ
zakaz@ventilatorry.ru

ErP2015 EXCEEDS THE NORM

EC axial fans – HyBlade®

Ø 630

- **Material:** Guard grille: Steel, coated with black plastic (RAL 9005)
  Fan housing: Sheet steel, galvanized and coated with black plastic (RAL 9005)
  Blades (5): Ⓐ to Ⓔ Press-fitted sheet steel blank, over-molded with PP plastic
  Ⓕ Aluminum insert, over-molded with PP plastic
  Rotor: Painted black
  Electronics housing: Die-cast aluminum, painted black
- **Direction of rotation:** Ⓐ to Ⓔ counterclockwise, Ⓕ clockwise, viewed toward rotor
- **Degree of protection:** IP55
- **Insulation class:** "F"
- **Installation position:** Shaft horizontal or rotor on bottom, rotor on top on request
- **Condensation drainage holes:** Rotor side
- **Mode:** Continuous operation (S1)
- **Mounting:** Maintenance-free ball bearings

Nominal data

Type	Motor	Blade pitch	Curve	Nominal voltage range	Frequency	Speed[1]	Max. input power[1]	Max. input current[1]	Max. back pressure	Perm. ambient temp.	Techn. features and connection diagram
				VAC	Hz	rpm	W	A	Pa	°C	
*3G 630	M3G 084-FA	---	Ⓐ	1~200-277	50/60	770	240	1,00	65	-25..+60	P. 132 / P7)
*3G 630	M3G 084-GF	---	Ⓑ	1~200-277	50/60	900	390	1,70	85	-25..+60	P. 132 / P7)
*3G 630	M3G 112-GA	---	Ⓒ	3~380-480	50/60	1000	700	1,10	130	-25[2]..+60	P. 133 / P8)
*3G 630	M3G 112-GA	---	Ⓓ	1~200-277	50/60	1020	730	3,20	150	-25[2]..+60	P. 132 / P7)
*3G 630	M3G 112-IA	---	Ⓔ	3~380-480	50/60	1160	1080	1,70	190	-25[2]..+60	P. 133 / P8)
*3G 630	M3G 150-IF	0°	Ⓕ	3~380-480	50/60	1510	3250	5,00	320	-25[2]..+65	P. 134 / M5)

Subject to change

(1) Nominal data at operating point with maximum load and 230 or 400 VAC.
(2) Occasional start-up between -40°C and -25°C is permissible. Continuous operation below -25°C only possible with special low-temperature bearings (on request).

Curves:

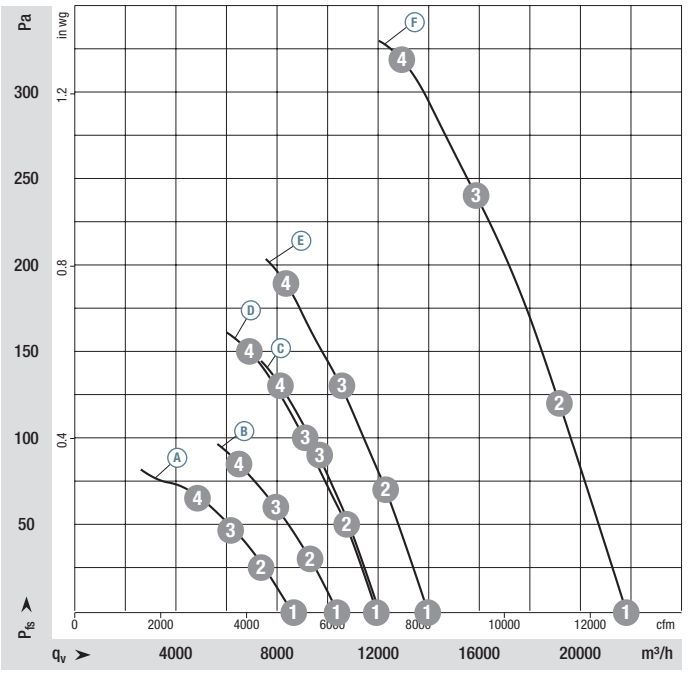

		n rpm	P_{ed} W	I A	L_{WA} dB(A)
Ⓐ	1	770	152	0,68	62
Ⓐ	2	770	190	0,84	61
Ⓐ	3	770	218	0,96	62
Ⓐ	4	770	240	1,00	64
Ⓑ	1	900	258	1,15	66
Ⓑ	2	900	311	1,38	66
Ⓑ	3	900	357	1,57	65
Ⓑ	4	900	390	1,70	68
Ⓒ	1	1000	473	0,77	75
Ⓒ	2	1000	561	0,90	71
Ⓒ	3	1000	629	1,01	69
Ⓒ	4	1000	700	1,10	70
Ⓓ	1	1020	463	2,08	76
Ⓓ	2	1020	555	2,47	72
Ⓓ	3	1020	648	2,86	70
Ⓓ	4	1020	730	3,20	73

Air performance measured according to: ISO 5801, installation category A, in ebm-papst full nozzle without contact protection. Intake-side sound level: Lw_A according to ISO 13347, Lp_A measured at 1 m distance from fan axis. The values given are only applicable under the specified measuring conditions and may differ depending on the installation conditions. In the event of deviation from the standard configuration, the parameters must be checked in installed condition. See Page 136 ff for detailed information.

- **Technical features:** See connection diagram P. 132 ff.
- **EMC:** Immunity to interference according to EN 61000-6-2 (industrial environment)
  Circuit feedback according to EN 61000-3-2
  Interference emission according to EN 61000-6-4 (industrial environment), according to household appliance standard on request
- **Touch current:** <= 3.5 mA according to IEC 60990 (measuring circuit Fig. 4)
- **Electrical connection:** Via terminal box
- **Protection class:** I (with customer connection of protective earth)
- **Conformity with standards:** Ⓐ Ⓑ EN 61800-5-1, EN 60335-1, CE
  Ⓒ Ⓓ Ⓔ EN 61800-5-1, CE; EN 60335-1 in preparation
  Ⓕ EN 61800-5-1, CE
- **Approvals:** Ⓐ EAC, UL on request; Ⓑ EAC, UL
  Ⓓ UL, CSA; Ⓒ Ⓔ UL, CSA planned; Ⓕ EAC

Airflow direction	❮ "V" without attachments	Weight without attachments kg	❮ "V" with square full nozzle	Weight with square full nozzle kg	❮ "V" with guard grille for short nozzle	Weight with guard grille for short nozzle kg
"V"	A3G 630-BL06 -G1	5,50	W3G 630-GL06 -G1	20,00	S3G 630-AL06 -G1	11,10
"V"	A3G 630-BM07 -H1	5,90	W3G 630-GM07 -H1	20,40	S3G 630-AM07 -H1	11,40
"V"	A3G 630-BE55 -51	9,60	W3G 630-GE55 -51	23,60	S3G 630-AE55 -51	14,90
"V"	A3G 630-BE55 -21	9,60	W3G 630-GE55 -21	23,60	S3G 630-AE55 -21	14,90
"V"	A3G 630-BG97 -01	11,20	W3G 630-GG97 -01	25,20	S3G 630-AG97 -01	16,50
"V"	A3G 630-AU31 -71	25,40	W3G 630-GU31 -71	40,00	S3G 630-AU31 -71	33,00

Airflow direction "A" on request

	n rpm	P_{ed} W	I A	L_{WA} dB(A)
Ⓔ ❶	1160	696	1,13	77
Ⓔ ❷	1160	836	1,35	74
Ⓔ ❸	1160	951	1,53	72
Ⓔ ❹	1160	1080	1,70	75
Ⓕ ❶	1510	2516	3,89	82
Ⓕ ❷	1510	2802	4,30	81
Ⓕ ❸	1510	3077	4,70	82
Ⓕ ❹	1510	3250	5,00	87

ВЕНТИЛЯТОРЫ.RU
МАГАЗИН ПРОМЫШЛЕННЫХ ВЕНТИЛЯТОРОВ
zakaz@ventilatorry.ru

EC axial fans – HyBlade®

Ø 630 with motor M3G 084

A3G 630-BL06-G1 (without attachments, airflow direction "V")

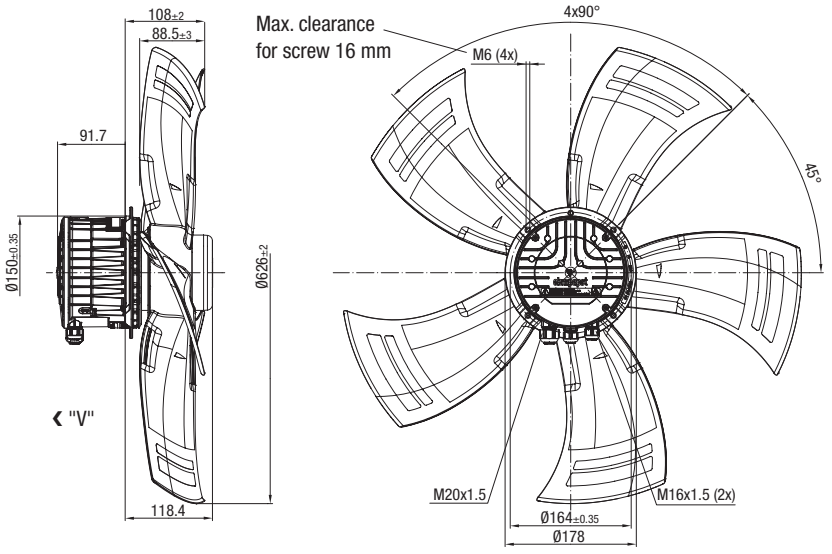

Inside diameter of
fan housing min. 634 mm

W3G 630-GL06-G1 (with square full nozzle, airflow direction "V")

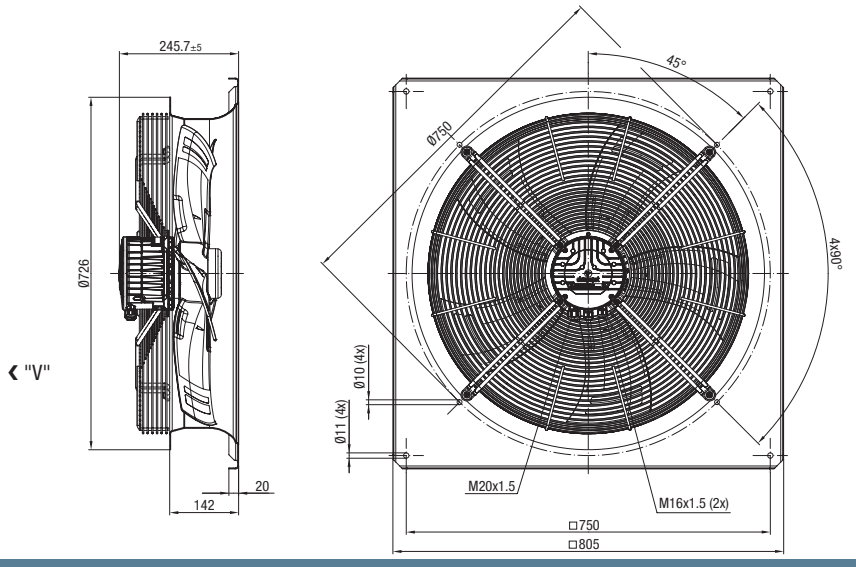

S3G 630-AL06-G1 (with guard grille for short nozzle, airflow direction "V")

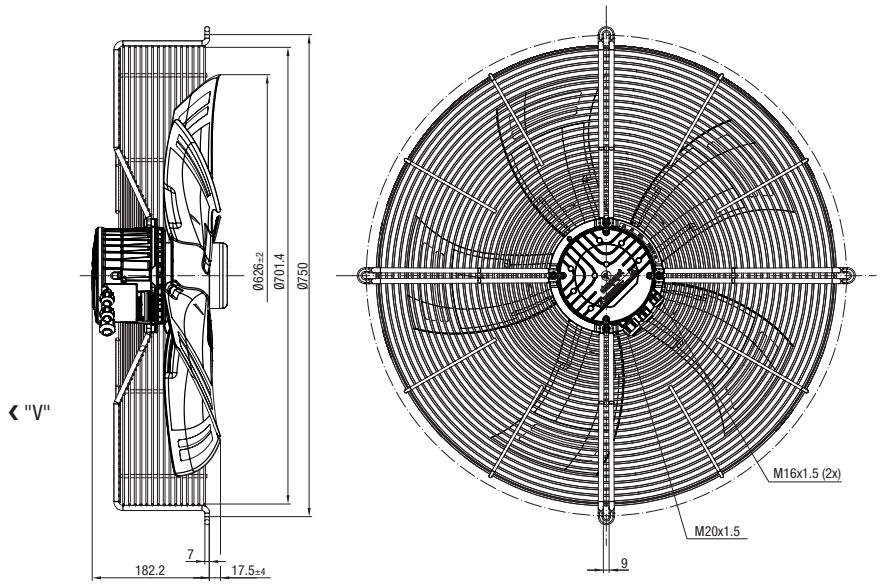

Inside diameter of
fan housing min. 634 mm

ВЕНТИЛЯТОРЫ.RU
МАГАЗИН ПРОМЫШЛЕННЫХ ВЕНТИЛЯТОРОВ
zakaz@ventilatorry.ru

EC axial fans – HyBlade®

Ø 630 with motor M3G 084

A3G 630-BM07-H1 (without attachments, airflow direction "V")

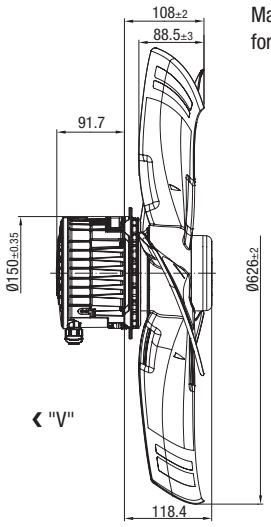

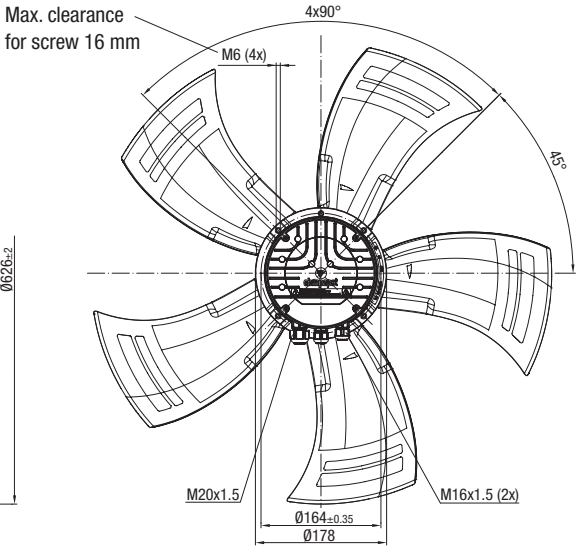

Inside diameter of
fan housing min. 634 mm

W3G 630-GM07-H1 (with square full nozzle, airflow direction "V")

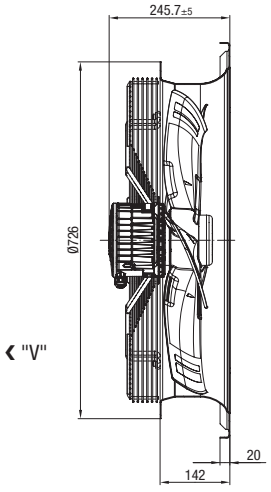

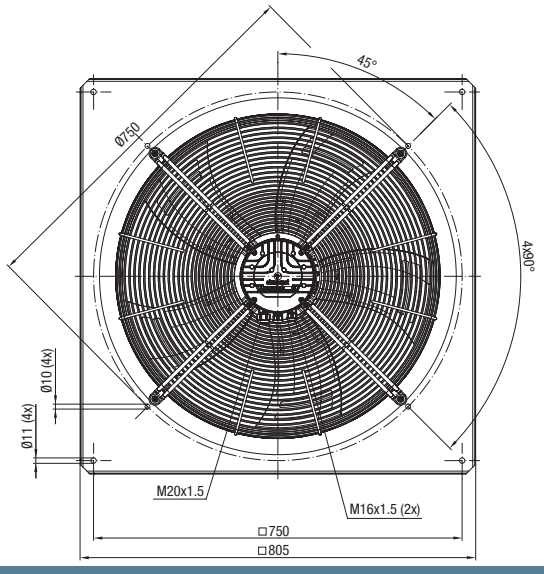

S3G 630-AM07-H1 (with guard grille for short nozzle, airflow direction "V")

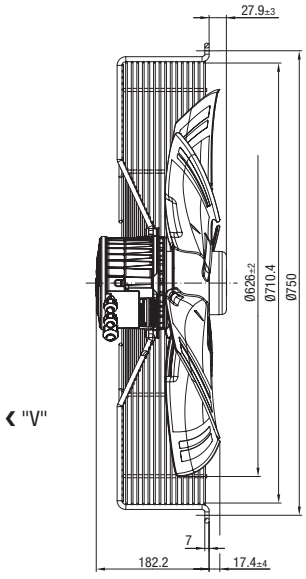

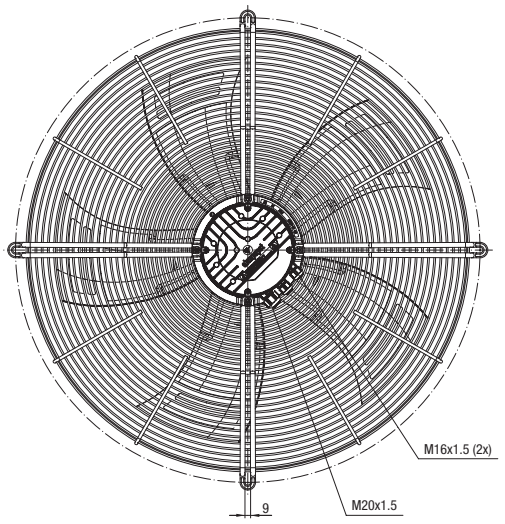

Inside diameter of
fan housing min. 634 mm

ВЕНТИЛЯТОРЫ.RU
МАГАЗИН ПРОМЫШЛЕННЫХ ВЕНТИЛЯТОРОВ
zakaz@ventilatorry.ru

EC axial fans – HyBlade®

Ø 630 with motor M3G 112

A3G 630-BE55-51 (without attachments, airflow direction "V")

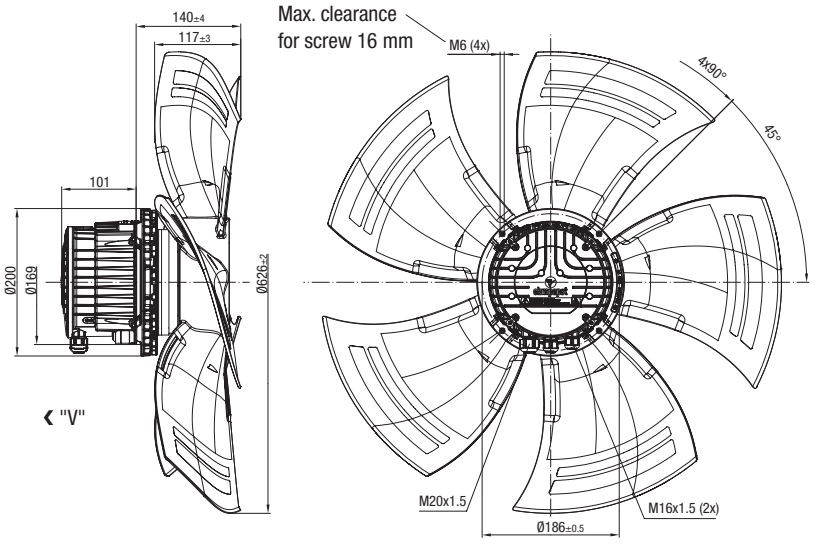

Inside diameter of
fan housing min. 634 mm

W3G 630-GE55-51 (with square full nozzle, airflow direction "V")

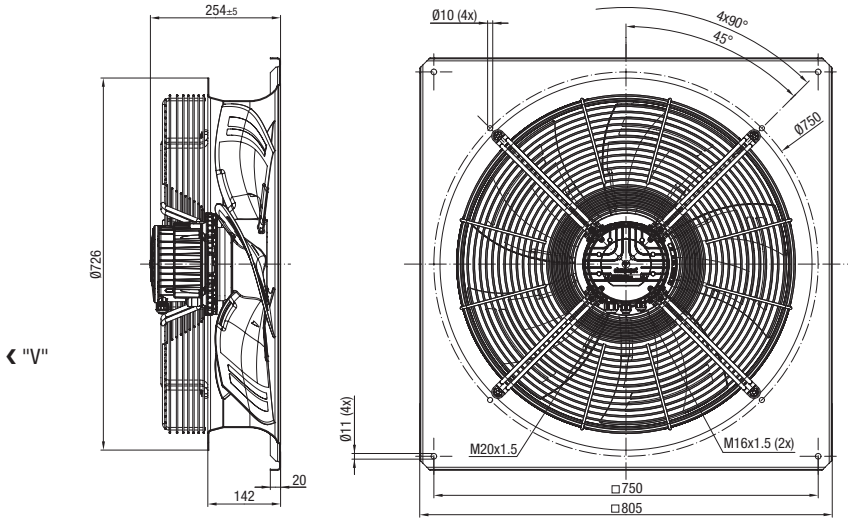

S3G 630-AE55-51 (with guard grille for short nozzle, airflow direction "V")

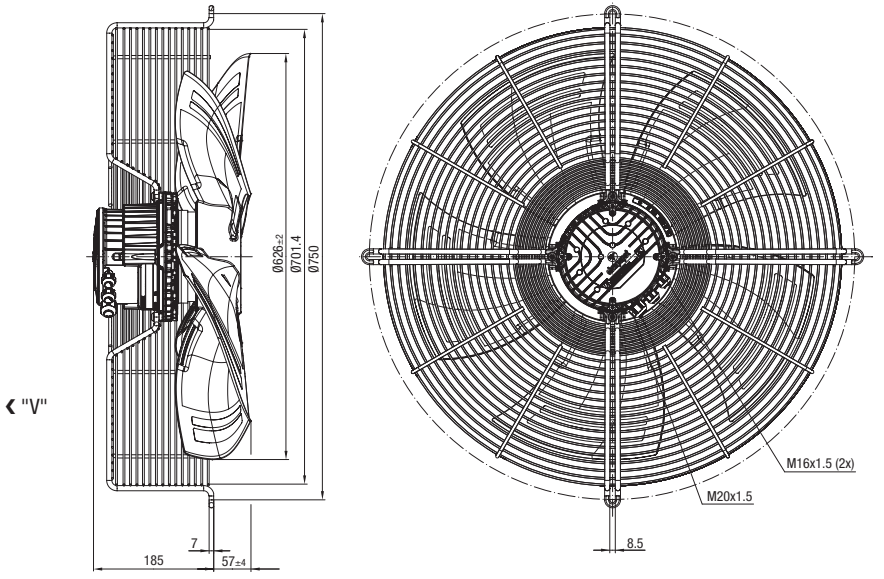

Inside diameter of
fan housing min. 634 mm

ВЕНТИЛЯТОРЫ.RU
МАГАЗИН ПРОМЫШЛЕННЫХ ВЕНТИЛЯТОРОВ
zakaz@ventilatorry.ru

EC axial fans – HyBlade®

Ø 630 with motor M3G 112

A3G 630-BE55-21 (without attachments, airflow direction "V")

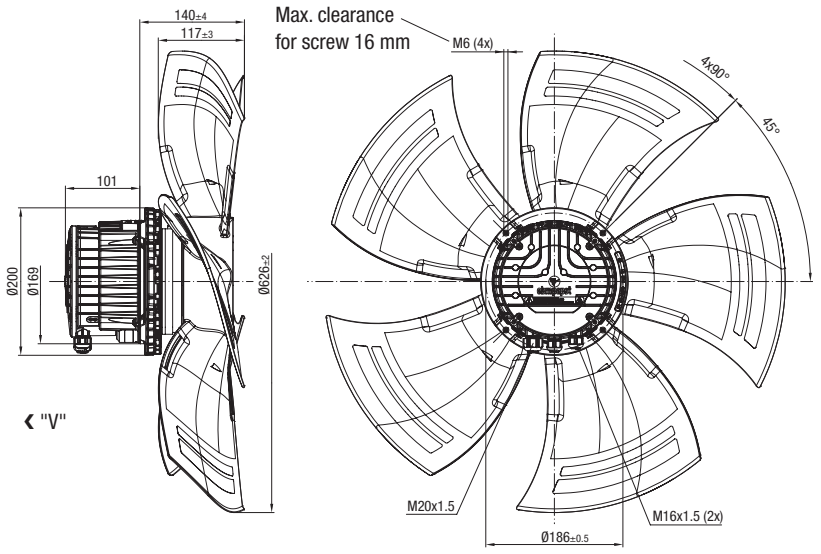

Inside diameter of
fan housing min. 634 mm

W3G 630-GE55-21 (with square full nozzle, airflow direction "V")

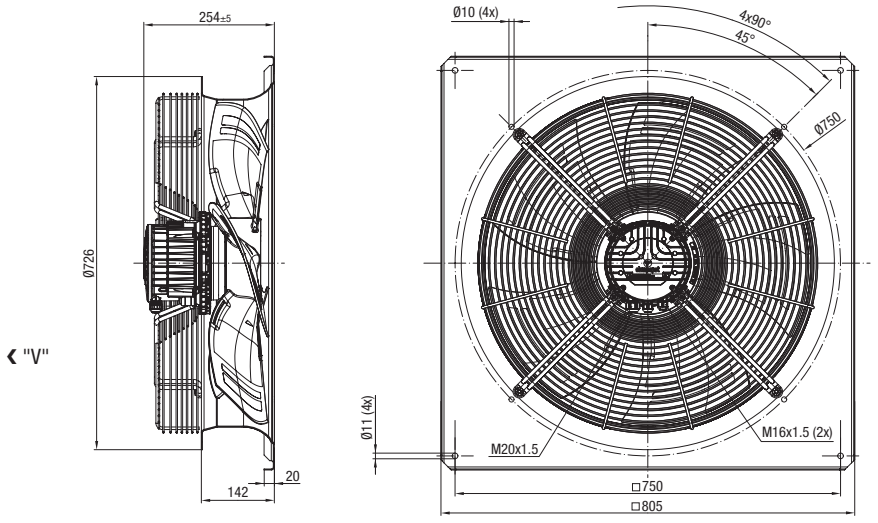

S3G 630-AE55-21 (with guard grille for short nozzle, airflow direction "V")

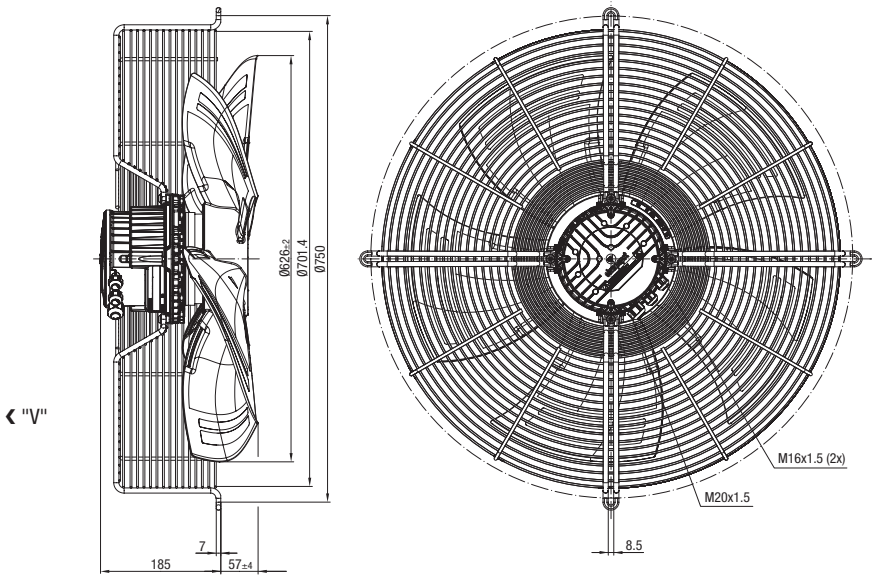

Inside diameter of
fan housing min. 634 mm

ВЕНТИЛЯТОРЫ.RU
МАГАЗИН ПРОМЫШЛЕННЫХ ВЕНТИЛЯТОРОВ
zakaz@ventilatorry.ru

EC axial fans – HyBlade®

Ø 630 with motor M3G 112

A3G 630-BG97-01 (without attachments, airflow direction "V")

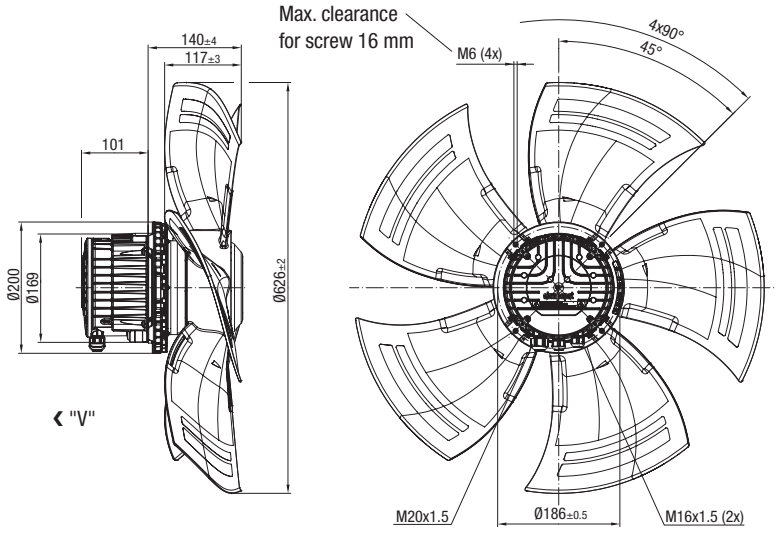

Inside diameter of
fan housing min. 634 mm

W3G 630-GG97-01 (with square full nozzle, airflow direction "V")

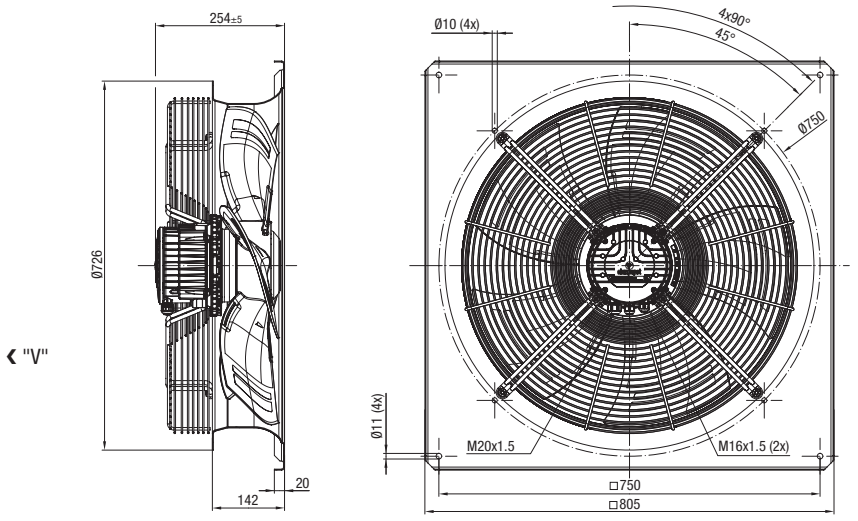

S3G 630-AG97-01 (with guard grille for short nozzle, airflow direction "V")

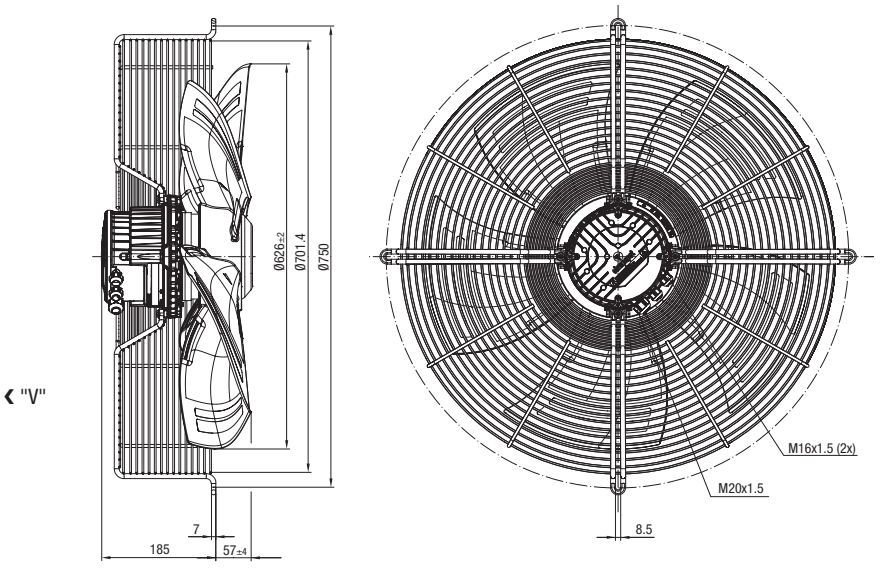

Inside diameter of
fan housing min. 634 mm

EC axial fans – HyBlade®

Ø 630 with motor M3G 150

A3G 630-AU31-71 (without attachments, airflow direction "V")

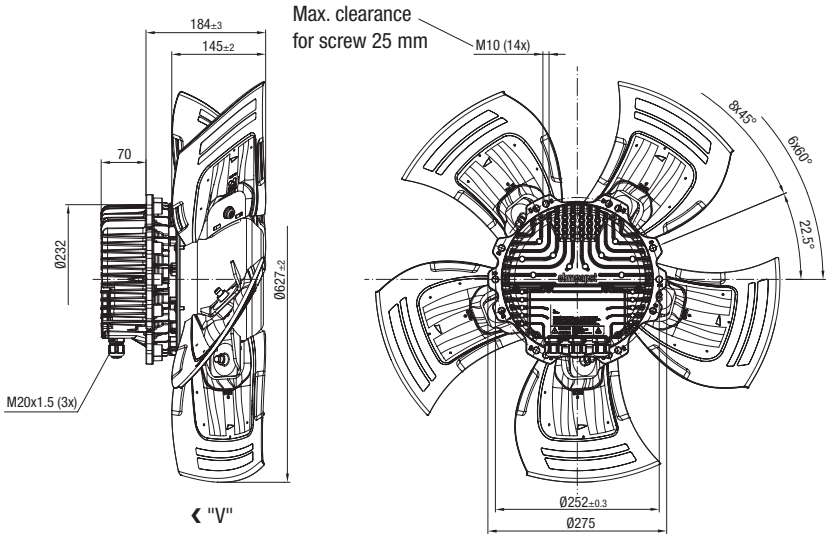

Inside diameter of
fan housing min. 634 mm

W3G 630-GU31-71 (with square full nozzle, airflow direction "V")

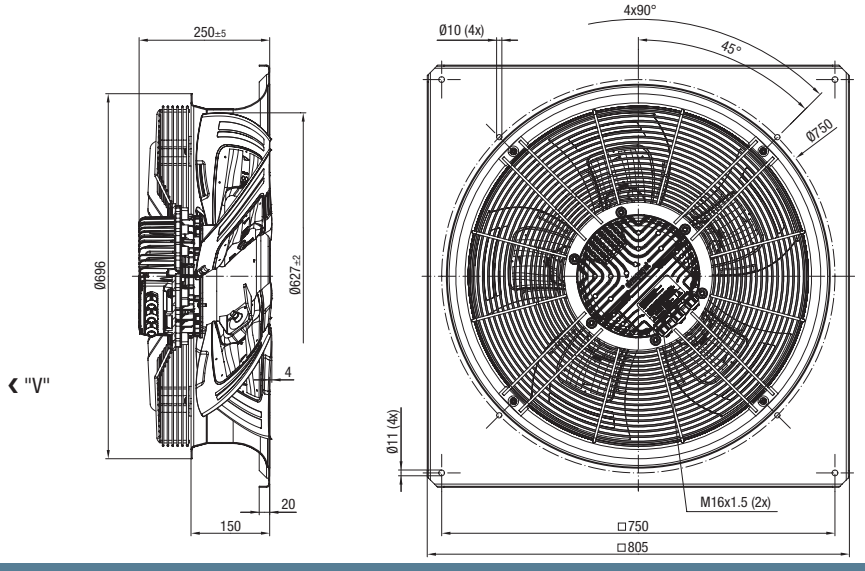

S3G 630-AU31-71 (with guard grille for short nozzle, airflow direction "V")

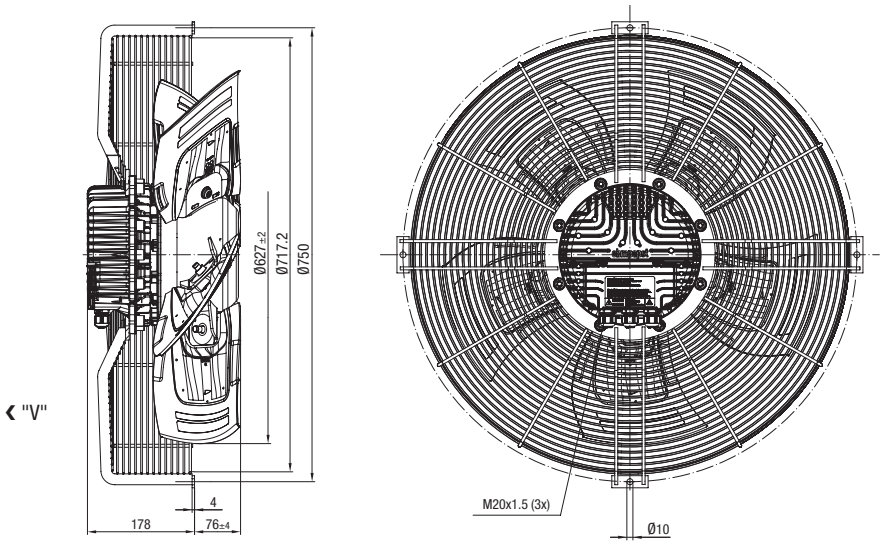

Inside diameter of
fan housing min. 634 mm